* 0000800000001 *

Cambridge Assessment International Education

Cambridge International AS & A Level

CANDIDATE NAME

CENTRE NUMBER

CANDIDATE NUMBER

9908315282

PHYSICS **9702/51**

Paper 5 Planning, Analysis and Evaluation **October/November 2024**

1 hour 15 minutes

You must answer on the question paper.

No additional materials are needed.

INSTRUCTIONS

- Answer **all** questions.
- Use a black or dark blue pen. You may use an HB pencil for any diagrams or graphs.
- Write your name, centre number and candidate number in the boxes at the top of the page.
- Write your answer to each question in the space provided.
- Do **not** use an erasable pen or correction fluid.
- Do **not** write on any bar codes.
- You may use a calculator.
- You should show all your working and use appropriate units.

INFORMATION

- The total mark for this paper is 30.
- The number of marks for each question or part question is shown in brackets [ ].

This document has **8** pages.

© UCLES 2024

[Turn over

1 A thin cylindrical bar magnet of length L and cross-sectional area A is attached to a block. An identical magnet is attached to a trolley, as shown in Fig. 1.1.

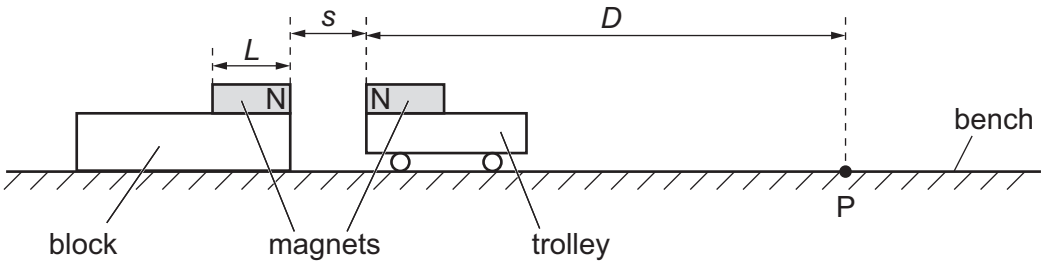

Fig. 1.1

The trolley is held so that the separation of the N poles of the two magnets is s.

Point P is a distance D from the N pole of the magnet on the stationary trolley.

The trolley is released. The speed v of the trolley at point P is determined using one light gate.

It is suggested that v is related to s by the relationship

$$\frac{mv^2}{2D} = \frac{KA^2B^2L^2}{s^4} - Q$$

where B is the magnetic flux density at the N pole of one of the magnets, m is the mass of the trolley, and K and Q are constants.

Plan a laboratory experiment to test the relationship between v and s.

Draw a diagram showing the arrangement of your equipment.

Explain how the results could be used to determine values for K and Q.

In your plan you should include:

- the procedure to be followed
- the measurements to be taken
- the control of variables
- the analysis of the data
- any safety precautions to be taken.

DO NOT WRITE IN THIS MARGIN
DO NOT WRITE IN THIS MARGIN
DO NOT WRITE IN THIS MARGIN
DO NOT WRITE IN THIS MARGIN
DO NOT WRITE IN THIS MARGIN

Diagram

DO NOT WRITE IN THIS MARGIN
DO NOT WRITE IN THIS MARGIN
DO NOT WRITE IN THIS MARGIN
DO NOT WRITE IN THIS MARGIN
DO NOT WRITE IN THIS MARGIN

.....

.....

.....

DO NOT WRITE IN THIS MARGIN
DO NOT WRITE IN THIS MARGIN
DO NOT WRITE IN THIS MARGIN
DO NOT WRITE IN THIS MARGIN
DO NOT WRITE IN THIS MARGIN

2 A student investigates an electrical circuit. A power supply of electromotive force (e.m.f.) E_s and negligible internal resistance is connected in series to three resistors, each of resistance Z.

A cell, an ammeter and a resistor of resistance R are connected in parallel across one of these resistors, as shown in Fig. 2.1.

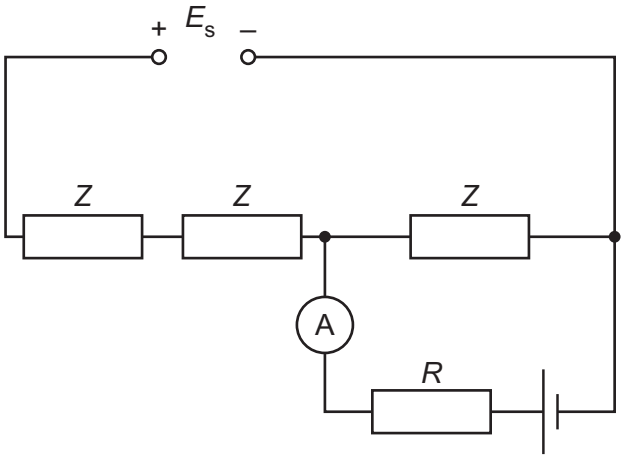

Fig. 2.1

The current I is measured by the ammeter for different values of R.

It is suggested that I and R are related by the equation

$$3E - E_s = I(3R + 2Z)$$

where E is the e.m.f. of the cell.

(a) A graph is plotted of $\frac{1}{I}$ on the y-axis against R on the x-axis.

Determine expressions for the gradient and y-intercept.

gradient = ...

y-intercept = ...

[1]

(b) Values of R and I are given in Table 2.1.

Table 2.1

R/kΩ	I/μA	$\frac{1}{I}$/A^{-1}
1.50	194 ± 2	
1.75	180 ± 2	
1.92	172 ± 2	
2.22	160 ± 2	
2.48	150 ± 2	
2.72	144 ± 2	

Calculate and record values of $\frac{1}{I}$/A^{-1} in Table 2.1.

Include the absolute uncertainties in $\frac{1}{I}$. [2]

(c) (i) Plot a graph of $\frac{1}{I}$/A^{-1} against R/kΩ. Include error bars for $\frac{1}{I}$. [2]

(ii) Draw the straight line of best fit and a worst acceptable straight line on your graph. Label both lines. [2]

(iii) Determine the gradient of the line of best fit. Include the absolute uncertainty in your answer.

gradient = ... [2]

DO NOT WRITE IN THIS MARGIN
DO NOT WRITE IN THIS MARGIN
DO NOT WRITE IN THIS MARGIN
DO NOT WRITE IN THIS MARGIN
DO NOT WRITE IN THIS MARGIN

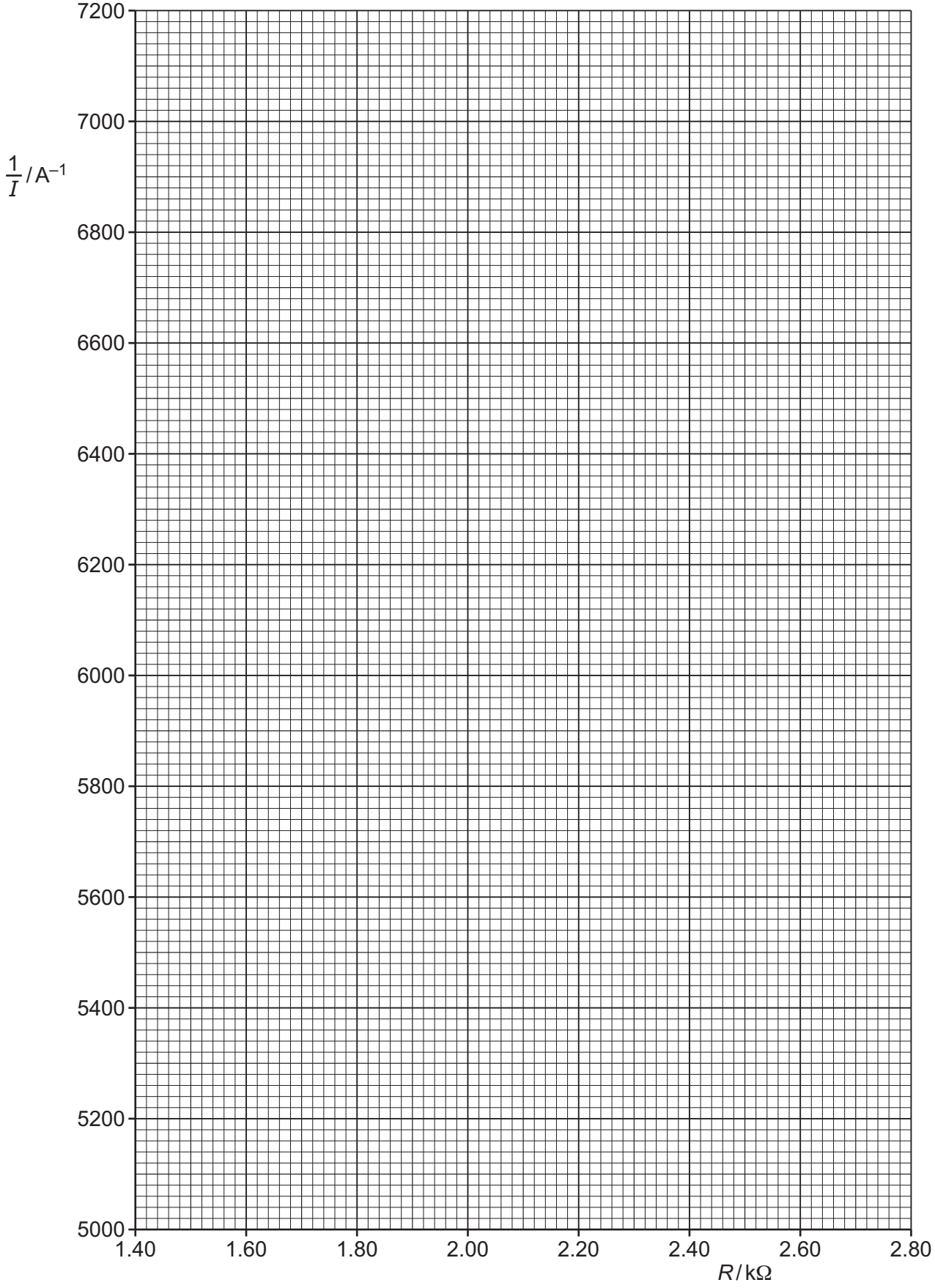

DO NOT WRITE IN THIS MARGIN
DO NOT WRITE IN THIS MARGIN
DO NOT WRITE IN THIS MARGIN
DO NOT WRITE IN THIS MARGIN
DO NOT WRITE IN THIS MARGIN

(iv) Determine the *y*-intercept of the line of best fit. Include the absolute uncertainty in your answer.

y-intercept = ... [2]

(d) (i) Using your answers to **(a)**, **(c)(iii)** and **(c)(iv)**, determine the values of *E* and *Z*. Include appropriate units.

Data: $E_s = (2.20 \pm 0.05)\,\text{V}$

E = ...

Z = ...
[2]

(ii) Determine the absolute uncertainty in *E*.

absolute uncertainty in *E* = ... [1]

(e) The experiment is repeated. Determine the resistance *R* that gives a value of *I* of 250 μA.

R = ... Ω [1]

[Total: 15]

To avoid the issue of disclosure of answer-related information to candidates, all copyright acknowledgements are reproduced online in the Cambridge Assessment International Education Copyright Acknowledgements Booklet. This is produced for each series of examinations and is freely available to download at www.cambridgeinternational.org after the live examination series.

DO NOT WRITE IN THIS MARGIN
DO NOT WRITE IN THIS MARGIN
DO NOT WRITE IN THIS MARGIN
DO NOT WRITE IN THIS MARGIN
DO NOT WRITE IN THIS MARGIN